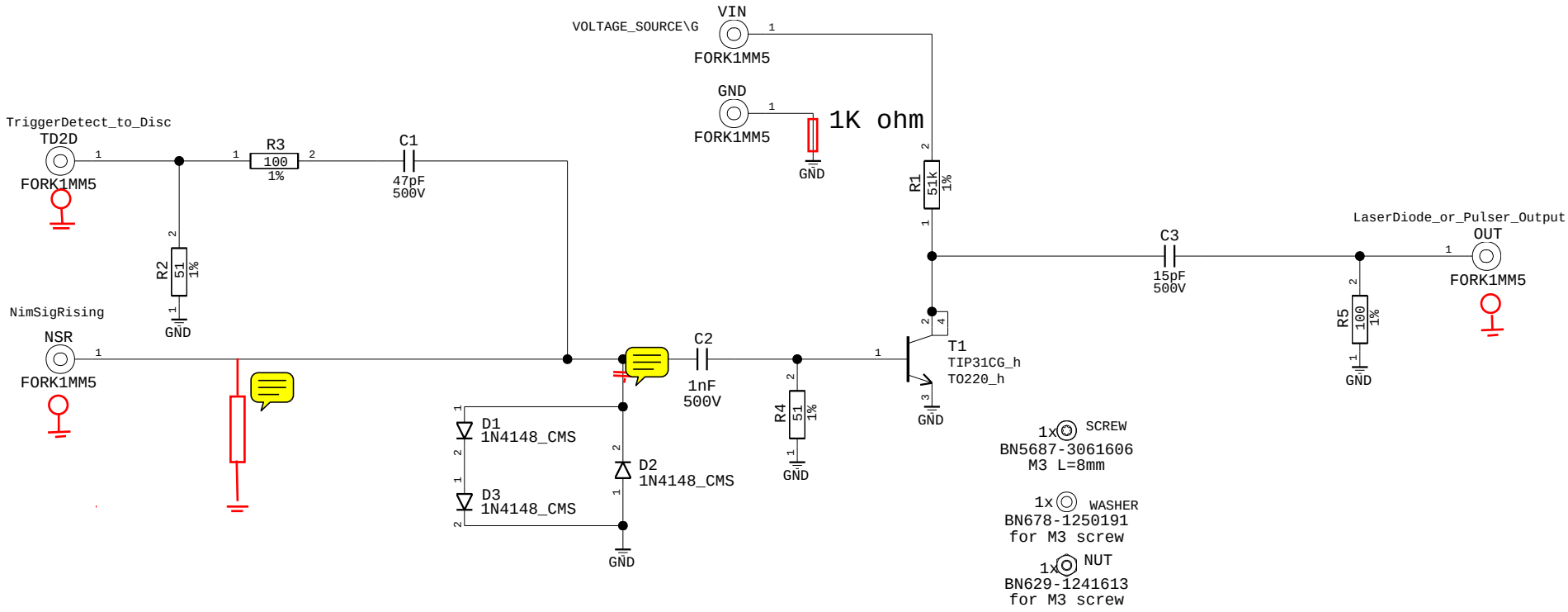

Project file:instapulser_cms.cpm

SYSTEM: SPB16.3

EDA-02888-V1-0

TS/DEM

European Organization
for Nuclear Research
1211 GENEVA 23
SWITZERLAND

PROJECT:Instapulser CMS

MODULE:instapulser_cms

Sheet: Module: 1/1 / Project: 1/1

LAST_MODIFIED=Wed Dec 11 15:47:29 2013

Design by: Andrew White

PCB by: WB

DATE: 10/12/2013