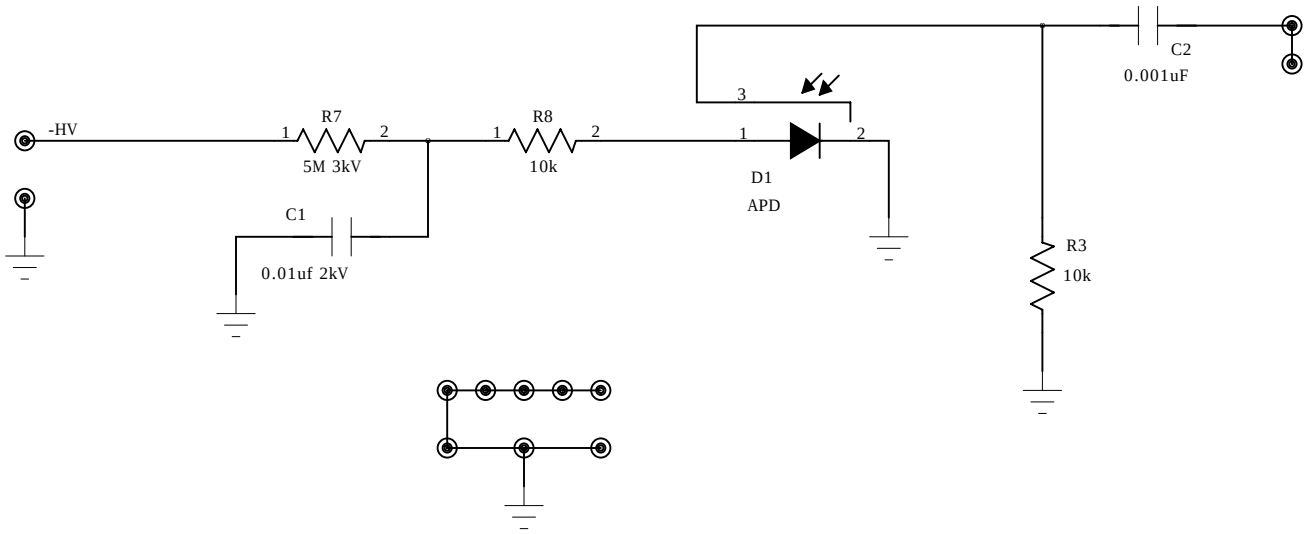

COMPANY: Princeton University Physics Department			
TITLE: APD Adapter			
DRAWN: stanc	DATED: 10 MAR 2015	REV: 0	SHEET: 1 OF 1